SMB Bearings

Radial Ball Bearing

Part Number: S316-6307-2PES

(for illustration only)

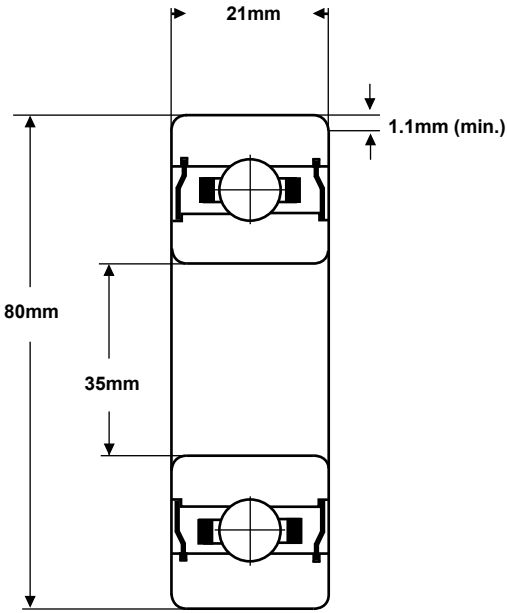

Material (rings & balls)	AISI316 stainless steel
Material (cage)	PE or PEEK
Closures	PE or PEEK seals
Load rating (stat)	309 Kgf
Load rating (dyn)	401 Kgf
Speed Limit *	600 rpm
Standard Lubrication **	None

* with adequate lubrication
** may vary

These bearings comply with EU ROHS and REACH regulations.

RADIAL PLAY	C2	CN	C3	C4
(microns)	1 - 11	6 - 20	15 - 33	28 - 46

TOLERANCE	
Bore Deviation	+0 / -0.050mm
OD Deviation	+0 / -0.050mm
Width Deviation	+0 / -0.120mm

SMB Bearings take no responsibilty for any errors or omissions in this data sheet. We reserve the right to change specifications without prior notice. We recommend that adequate testing is carried out on products before they are determined as suitable for an application.