Part Number: CCSI-6909-2PKS

(for illustration only)

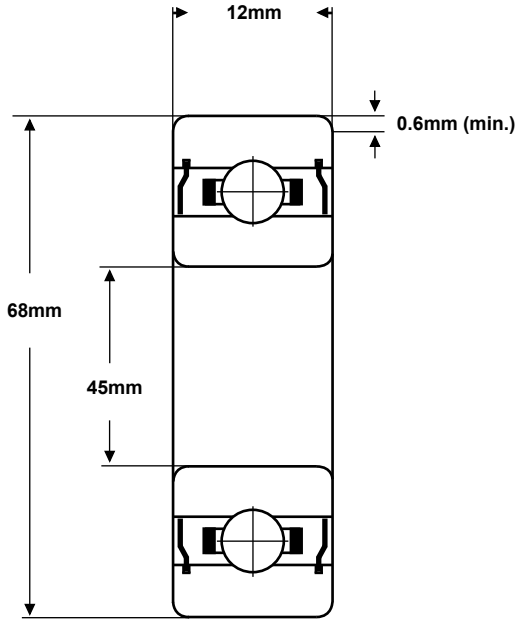

Material (rings & balls)	Silicon Nitride (Si3N4)
Material (cage)	Full complement, PEEK or PTFE
Closures	PEEK seals
Load rating (stat)	692 Kgf
Load rating (dyn)	884 Kgf
Speed Limit *	2,700 rpm
Standard Lubrication **	None

* with adequate lubrication

** may vary

These bearings comply with EU ROHS and REACH regulations.

RADIAL PLAY	C2	CN	C3	C4
(microns)	1 - 11	6 - 23	18 - 36	30 - 51

TOLERANCE	P0
Bore Deviation	+0 / -0.012mm
OD Deviation	+0 / -0.013mm
Width Deviation	+0 / -0.120mm

SMB Bearings take no responsibilty for any errors or omissions in this data sheet. We reserve the right to change specifications without prior notice. We recommend that adequate testing is carried out on products before they are determined as suitable for an application.